DC / AC INVERTER

ATTENTION!

This manual contains instructions concerning the installation and putting into operation of the UPS. Read the manual carefully before currying out installation, which must be done by a trained person.

Because this manual contains essential information on the usage of the equipment, it must be kept in a safe place and consulted before operating on the UPS.

SAFETY REGULATIONS

THE UPS MUST NOT BE USED UNLESS IT IS CONNECTED TO EARTH

The first connection to make is the connection between the grounding lead and the terminal indicated with the symbol:

HIGH VOLTAGES ARE PRESENT INSIDE THE EQUIPMENT EVEN WHEN THE INPUT AND BATTERY SWICHES ARE OPEN, BESIDES IN THE THREEPHASE OUTPUT VERSIONS A PART OF THE POWER CIRCUITS REMAINS CONNECTED TO THE INPUT NEUTRAL.

All maintenance operations inside the UPS must the carried out only by trained personnel.

IF IT IS NECESSARY TO REPLACE THE FUSES, THEY MUST BE REPLACED WITH OTHER FUSES OF THE SAME TYPE. (Consult paragraph INTERNAL PROTECTIONS)

TO INTERRUPT THE POWER SUPPLY TO THE UTILITIES IN DANGEROUS CONDITIONS, OPEN ALL THE SWICHES LOCATED BEHIND THE FRONT DOOR, OR SWITCH ON THE “ SYSTEM OFF ” COMMAND ON THE UPS FROM THE CONTROL PANEL.

THE BATTERY SHOULD BE CHANGED IF NECESSARY ONLY BY QUALIFIED PERSONNEL. TO ELIMINATE REPLACED PARTS IT IS OBLIGATORY TO DELIVER THEM TO ONE OF THE SPECIAL CONSORTIUMS FOR DISPOSAL BY RECYCLING. THE BATTERIES ARE CLASSIFIED TOXIC WASTE BY LAW.

The company reserves the right to make changes to the product described in this manual at any time and without notice for reasons of improvement.

GENERAL SPECIFICATIONS

Programmable Battery Test

High Frequency IGBT Switching with PWM inverter, Full Bridge , 3 Phase Control

Double Way Static and Manuel By-Pass

Controlled with Microprocessors

Stand-By Operation for Energy Saving

Self Test and Service Through Modem

Parallel Operation for Increasing Power (Optional)

Remote Control and Controlling Panel (Optional)

2x16 Character LCD Display with Back Light and Buzzer

Low Audible Noise Level by Smart Fan Controlling System

Online Double Conversion System, with Output Galvanic Isolation Transformer

Greater than 3:1 Crest Factor for Non-Sinusoidal Loads

Communication at All Network Systems with RS-232 Interface (Optional)

MODES OF OPERATION

BLOCK DIAGRAM

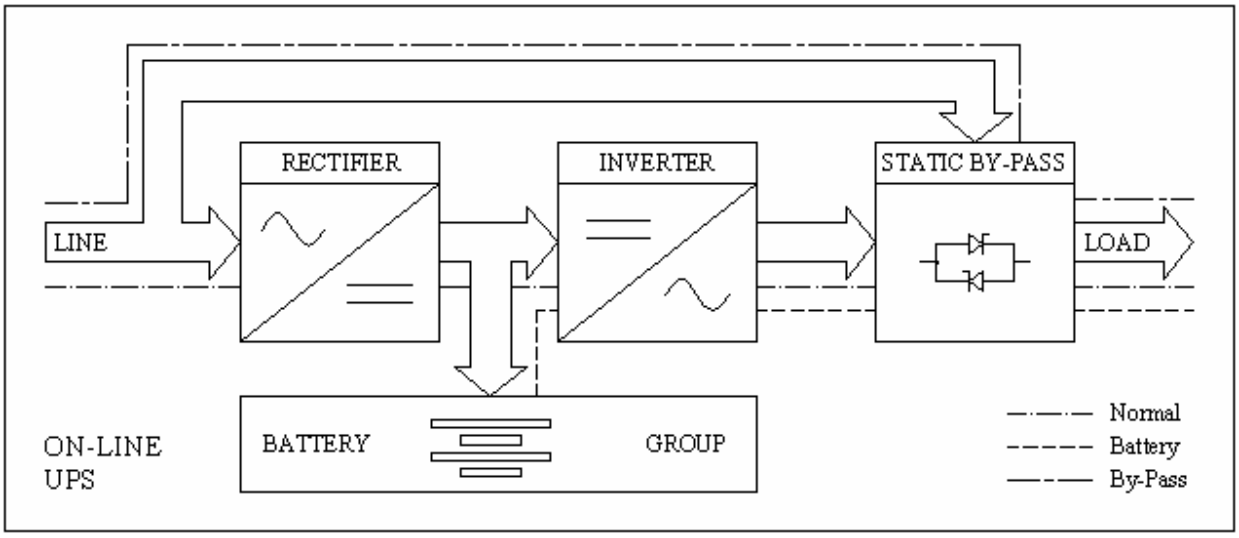

BLOCK DIAGRAM COMPONENTS

The UPS consists of the following subassemblies:

RECTIFIER
Represents the input stage and transforms the alternating voltage of the power line in continuous voltage. The functions carried out by the rectifier are the following:

- Powering the inverter with direct current.
- Charging the battery automatically. Battery charging is done in two phases: the first phase supplies 80% of power with limited current (recharging current) and growing voltage. The second supplies the remaining 20% of the charge with steady voltage (holding).

Recharging current is automatically limited to 15% of the capacity in Ah contained in the memory. This recharging current imposed applies only when the total power delivered to the battery and the load does not exceed maximum 110% of Pn.

EXTERNAL BATTERY
Provides the reserve energy for powering the load when there is no power input to the UPS.

HARMONIC REDUCTION FILTER (OPTIONAL)
The filter is positioned to the entry of the rectifier, allows to reduce the input harmonic distortion of the input current It is composed by two inductors and by a group of capacitors. The filter is protected in entry with some fusible.

INVERTER
This is the output stage. Converts direct voltage from the RECTIFIER or BATTERY into stabilized sinusoidal alternating voltage. It is always in operation and the load connected to the output of the UPS is always powered by the INVERTER.

STATIC SWITCH
This device allows the instantaneous automatic or manual switching of the power feed from the secured line (INVERTER output) to an unsecured line (By-Pass line) or vice versa.
The STATIC SWITCH is supplied with a device, ***BACKFEED PROTECTION*** that prevents the danger of current returns on the reserve line, in the case of Mains power failure due to a break on the SCR.

NORMAL OPERATION

In normal operation AC voltage converted into DC Voltage by rectifier. This DC voltage is used by battery charging and converting to AC voltage by inverter.

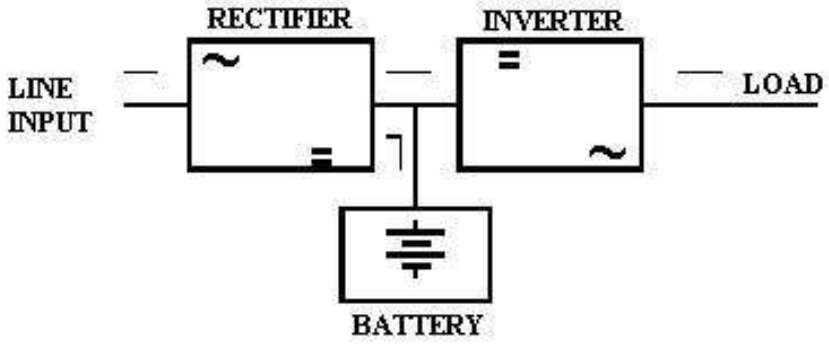

BATTERY OPERATION (WHEN LINE IS CUTS OFF)

Inverter provides DC voltage for operating, from battery group. So critical loads don't affect from the cutting off the line. Back-up time is proportional to capacity of battery group.

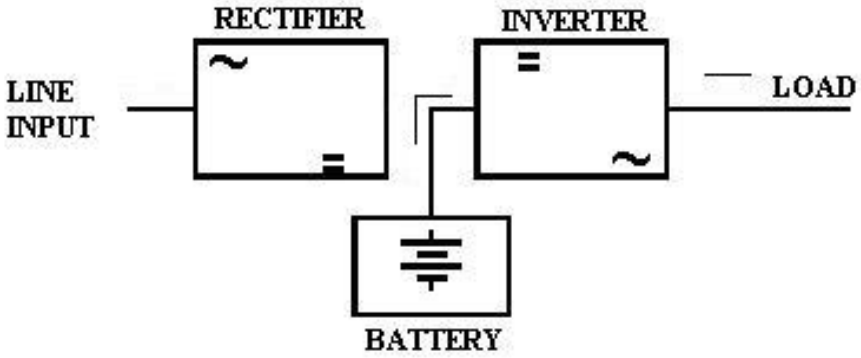

WHEN LINE IS RE-RUN

Upon return of mains power, the UPS recharges the batteries automatically.

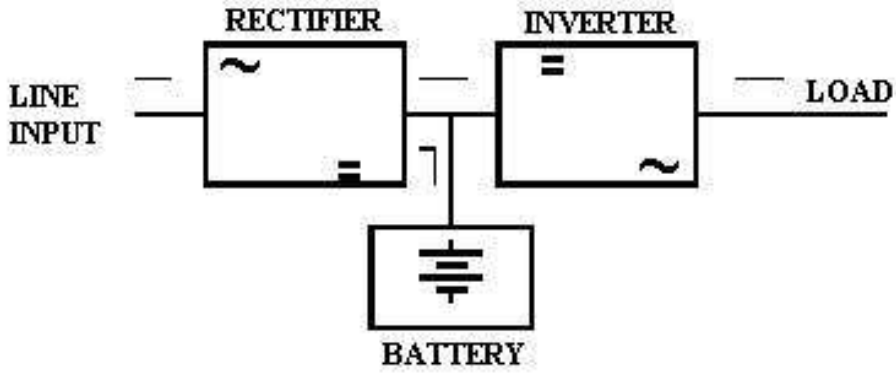

OPERATION OF THE BY-PASS NETWORK

In case of overloading or failure of the inverter, if mains voltage is suitable for operating, load is transferred to line as synchronous and interrupted

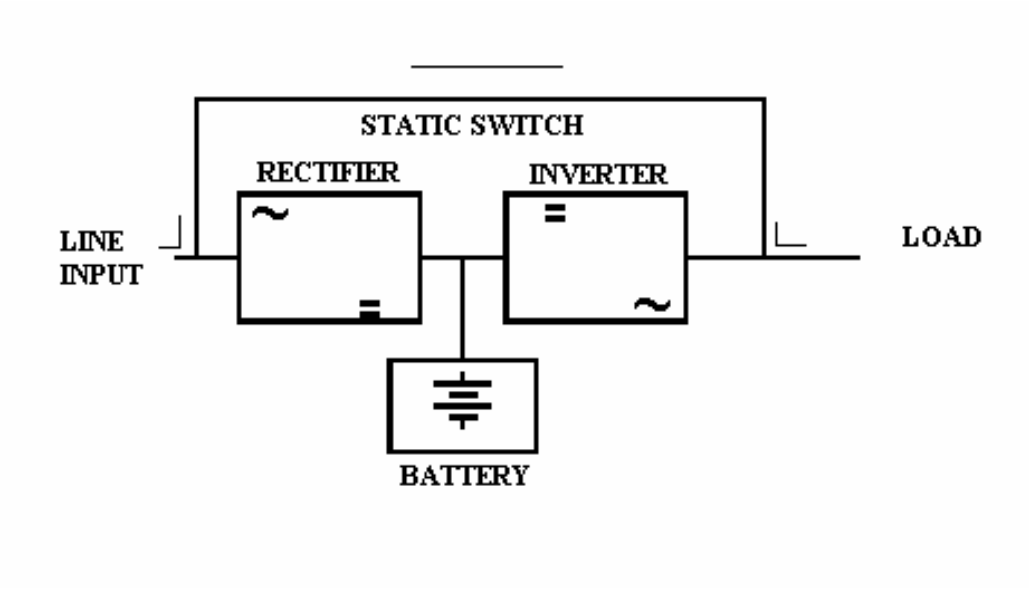

TECHNICAL SPECIFICATIONS

TECHNICAL SPECIFICATIONS

OUTPUT	
Output Voltage	220/230 VAC ± 1% (for 1 phase) 380/400 VAC ± 1% (for 3 phase)
Over Loading	10 minutes At 125% Load, 1 minutes At 150% Load, 1 seconds At 200% Load.
Total Harmonic	Sinusoidal, < 3 % at Linear Load, < 5 % at non-Linear Load
Voltage Tolerance	± 1 %
Dynamic Response	± 5 % into 5 ms.
Frequency	50 Hz
Operation Technique	RISC Microcontrolled HF IGBT, Inverter (PWM)
Efficiency	> 90 %
Protection	Short Circuit, Over Voltage, Current and Temperature
STATIC BY-PASS	
Load Level	200 %
Transfer Time	0 ms
INPUT	
Voltage Tolerance	± 20 %
Frequency Tolerance	± 5 %
Power Factor	> 0.8 (0.9 Optional)
Protection	Over Current Thermal Fuse, Over Voltage and EMI-RFI Filter.
Operation Technique	Phase Angle Controlled Thyristor Module Rectifier
Efficiency	> 90 %
BATTERY	
Type	Sealed Lead-Acid / Maintenance Free
Charging	At Constant Voltage Current Limiting
Protection	Over Current Electronic Protection, Thermic Fuse and Over Voltage Protection
OPERATION WARNINGS	
Displaying Measured Values	I/O Voltage and Frequency, Battery Voltage and Current, Load Level and Current, System Temperature, Remaining Time
Warning Messages	Mains Low / High, No Mains, Battery Full, No Battery, Low Battery, Over Loading,
Sound Alarm	While Battery Running out Continuous Beep, On Other Warnings 2 short 'beep' per 2 seconds. You can cancel this property on front panel.
Self Test	Manuel Self Test, Periodic Test per 60 Hours
Light Warnings	Load at By-Pass, Load at UPS, Mains Normal
ENVIRONMENT	
Operating Temperature	-10 / +50 °C
Relative Humidity	% 90 (DIN 40040)
Operating Attitude	Max. 3000 Mt.
Audible Noise Level	At 1 m. less than. 60 db
GENERAL	
Over Voltage Protection	IEEE 587 (4500 A, 110 Joules)
Electrical Interference Reducing	FCC Part 15 Class B
Protection Level / Color	IP 20 / RAL7035
RS 232 (Optional)	On Windows NT Operating System Warnings and Closing Securely
Electrical Standards	EN 50091 -1 (Security) / EN 50091 -2 (EMC)

WEIGHT & DIMENSIONS

1 PHASE / 1 PHASE

Output Power	Battery Group	Height (mm)	Width (mm)	Depth (mm)	Weight (kg)
600 VA	2 Units	360	210	470	45
900 VA	2 Units	400	240	530	66,5
1.2 kVA	4 Units	810	380	485	71
2 kVA	12 Units	810	355	485	110
3 kVA	12 Units	810	355	485	110
4 kVA	12 Units	810	355	485	120
5 kVA	12 Units	1020	490	590	177
6 kVA	12 Units	1020	490	590	188
7.5 kVA	12 Units	1020	490	590	200
10 kVA	12 Units	1020	490	590	237,5
15 kVA	12 Units	1220	495	600	286

3 PHASE / 1 PHASE

Output Power	Battery Group	Height (mm)	Width (mm)	Depth (mm)	Weight (kg)
10 kVA	22 Units	1220	495	600	203
15 kVA	22 Units	1220	495	600	265
20 kVA	22 Units	1220	495	600	320
30 kVA	30 Units	1220	495	600	435

3 PHASE / 3 PHASE

Output Power	Battery Group	Height (mm)	Width (mm)	Depth (mm)	Weight (kg)
10 kVA	22 Units	1230	510	715	240
15 kVA	22 Units	1230	510	715	298
20 kVA	22 Units	1430	600	810	392
30 kVA	22 Units	1430	600	810	425
40 kVA	22 Units	1550	660	910	470
60 kVA	30 Units	1550	660	910	570
80 kVA	30 Units	1700	780	960	600
100 kVA	30 Units	1700	780	960	750
125 kVA	32 Units	1900	1350	800	1110
160 kVA	32 Units	1900	1350	800	1300
200 kVA	32 Units	1900	1350	800	1600
250 kVA	32 Units	1900	1350	800	2000

FRONT PANEL

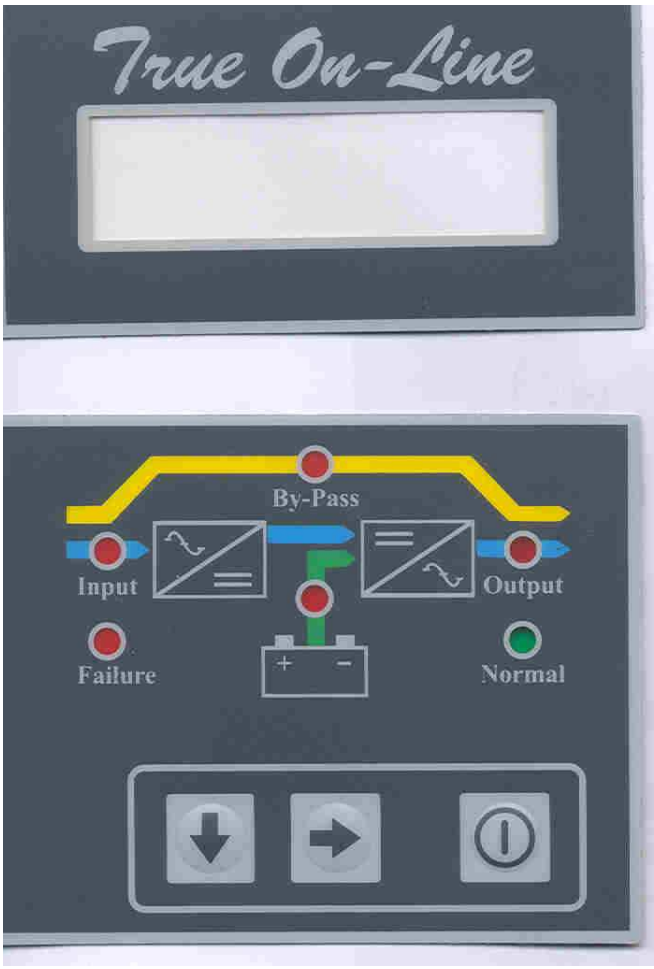

Operator control and display panel

BUTTONS

On/Off Button "①"

It works with pressing this button and UPS takes on the load or gives the load to the line.

To get OFF the UPS, this button should be pushed at least 2.5 seconds continuously. It also prevents take on load to the line by mistake.

Window Selecting Button "⇨"

To control UPS's status, there are 5 windows to set some adjustments with user's invoke. To pass these windows, use this button. Windows are called as shown below;

1. Opening Window,
2. Status Control Window,
3. Warning Control Window,

4. Sound Alarm Window,
5. Periodic Test Window,

Sub Window Search Button "⇩"

Status Control and Warning Control windows become from sub windows. To pass UPS's status window and see warnings, use this button. In vocalic warning window this button is used, too.

WINDOWS

Opening Window

It shows that if UPS is on/off and UPS take on the load / line.

```
UPS ON
Load ON UPS
```

or

```
UPS OFF
Load ON INPUT
```

There is no sub window. UPS pass this button every on/off time.

Status Control Window

There are 5-sub window to UPS's status information. In this window, you can see about values line, load and environmental information. Line voltage, output voltage and frequency, battery voltage, UPS temperature, load level and remaining time information can be seen. (This remaining time changes depend on the load level.).

```
UPS Status:⇩
Measured Value
```

Use "⇩" button to pass sub windows.

1. In sub window UPS's Output Voltage and Output Frequency can be seen as "true RMS"

```
Output 220 VAC
Frequency 50 Hz
```

2. In sub window Line Voltage and Battery Voltage,

```
Input 221 VAC
Battery 163 VDC
```

3. In sub window approximate Remaining Time and Load Level,

```
Backup Time 30dk
Load Level % 58
```

4. In sub window Temperature and Load Level,

```
UPS Temp.  22°C
Load Level % 58
```

5. In sub window there is a summary window about first 4 windows.

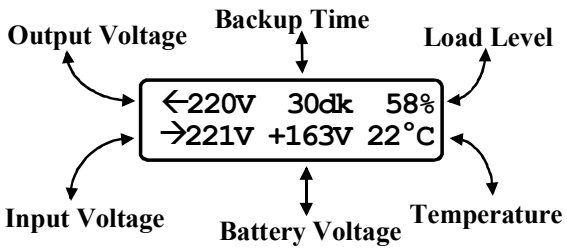

Warning Control Window

UPS always makes measurements and controls its status and if there is a value over nominal values it gives vocalic and lightened warnings to warn the user. These are both UPS's status information and warning information. If there is no warning or fault information, in display "Normal Operation" message can be seen.

```
Filure Status:⇩
Normal Operation
```

If there is a fault, it gives vocalic warning and the warnings are given and they can be seen by "⇩" button.

- "***Input High***" warning happens, if there is a voltage over 250 VAC on the line.

```
Failure Status:⇩
Input High
```

- "***Input Low***" warning happens, if there is a voltage under 150 VAC on the line.

```
Failure Status:⇩
Input Low
```

- "***Input OFF***" warning happens, if there is no line at the input of the UPS.

```
Failure Status:⇩
Input OFF
```

- "***Over Load %100***" warning, it shows that connection between UPS and load is over UPS's capacity. (Between %100 and %150). In this situation UPS works about 10 minutes and if the condition continuous load is going to be on load and UPS gives "***Over Load"*** *warning.*

```
Failure Status:⇩
Over Load %100
```

- "***Over Load***" warning, it shows that connection between UPS and load is over UPS's capacity (Between %100 and %150) or UPS works about 10 minutes and load is higher than %150 over than 12 seconds.

```
Failure Status:⇩
Over Load
```

- "***Rect. Failure***" warning, it shows that there is a fault in UPS and you must call the technical service. In this situation UPS operates from batteries.

```
Failure Status:⇩
Rect. Failure
```

- "Over ***Temperature***" warning, it shows that UPS's temperature is over than 50°C. In this situation UPS operates about 10 minutes and if there is no change UPS turns off.

```
Failure Status:⇩
Over Temperature
```

- "***Output Failure***" warning, it shows that there is a fault on UPS and you must call the service.

```
Failure Status:⇩
Output Failure
```

- "***Short Circuit***" warning, it shows that there is a short circuit at the output of the UPS or happens an over load.

```
Failure Status:⇩
Short Circuit
```

- "***Battery Low***" warning, load is feeding from batteries and they are running out. It continuous about 5 minutes. With this warning the continuous warning can be given. With this warning, turn off the load and then turn off the UPS.

```
Failure Status:⇩
Battery Low
```

- *Battery High" warning,* means there is a rectifier failure. In this situation, rectifier stops the operation and battery group defect are prevented.

```
Failure Status:⇩
Battery High
```

- "***Battery OFF***" warning, it shows that there is no power on batteries and UPS is going to off mode by automatically.

```
Failure Status:⇩
Battery OFF
```

Sound Alarm Window

UPS writes messages into Warning Control Window if there is a fault or warning and gives sound alarm. Continuous alarm while battery is Running Out, in other warnings 2 short "dıt" in 2 seconds and if batteries are run out it gives continuous alarm.

```
Buzzer:⇩
       ON
```

If you don't want to hear the alarm you can use the "⇩" button to cancel it. Every time you restart the UPS it becomes open position.

Automatic ON Window

In the case of battery off position, UPS operating a long time with out line voltage, you can operate the UPS ON position when the input line voltage come from again. With out pressing UPS ON button.

```
Automatic ON:⇩
      ON
```

Cold Start Window

If there is no input voltage and you want to operate the UPS, than you can use the "⇩" button to select cold start operation. In this case the battery group must be charged before.

```
Cold Start:⇩
      ON
```

BY-PASS SWITCH

There is a switch at the back of the UPS. It allows you to attention/repair the UPS without turn off the UPS.

There are 3 statuses about this switch;

0. There is no voltage of the UPS's output sockets.
1. In this position UPS's output sockets connected to the line.
2. In this situation UPS's output sockets feeds from "Static By Pass" switch.

STATIC BY-PASS SWITCH

If load level is lower than %100 load feeds from UPS. If over load or output short circuit conditions, UPS use this button for protection and continue to feed load. It is a semiconductor device. Static By- Pass switch allows to uninterrupted transients between UPS and Line by Micro controller.

It also controls that the line is in nominal conditions.

INVERTER INSTALLATION PROCEDURE

ATTENTION

INVERTER OPERATING PROCEDURE

1 – Battery Fuse : OFF and Line Fuse : OFF
2 – Connect Battery Group
3 – Push 20 Seconds CHARGE BUTTON
4 – Make Battery Fuse ON
5 – Make Input Line Fuse ON
6 – Make ON INVERTER on front panel
7 – Connect the load
8 – Make ON By-pass Fuse

ATTENTION!

Before taking the Manuel By-pass switch to "ON STATUS"

1-Make the UPS OFF to By-pass Status from front panel.

2-Make the manuel by-pass switch to "ON STATUS"

3-Make the by-pass and line MCB to "OFF STATUS"

Before taking the Manuel By-pass switch to "OFF STATUS"

1-Make the by-pass and line MCB to "ON STATUS"

2-Make the Manuel By-pass switch to "OFF STATUS"

3-Power ON the UPS from front panel.

INVERTER-2000/…../4000;(1 / 1 PHASE) MECHANICAL WIEV

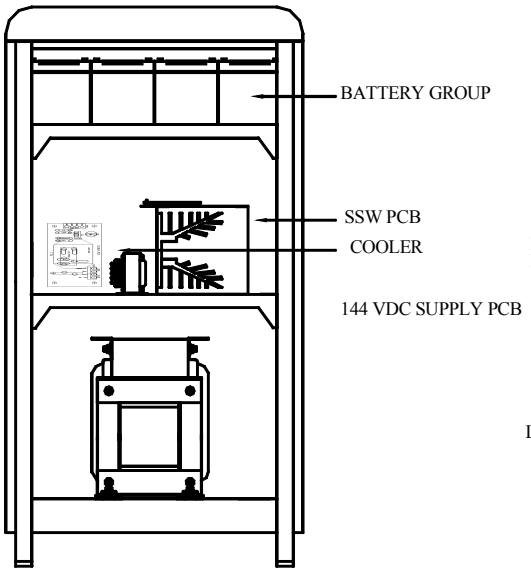

FRONT VIEW

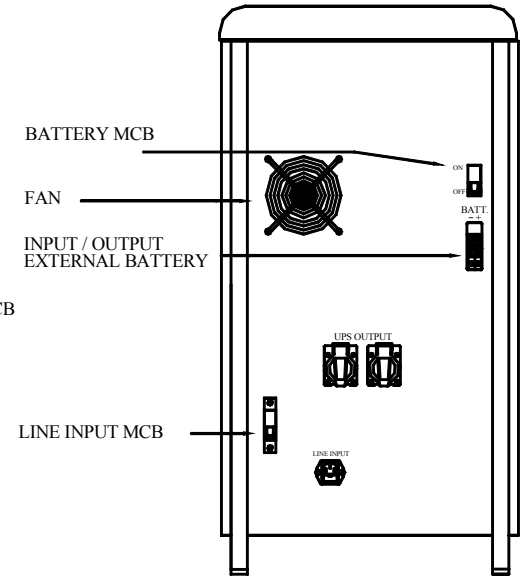

REAR VIEW

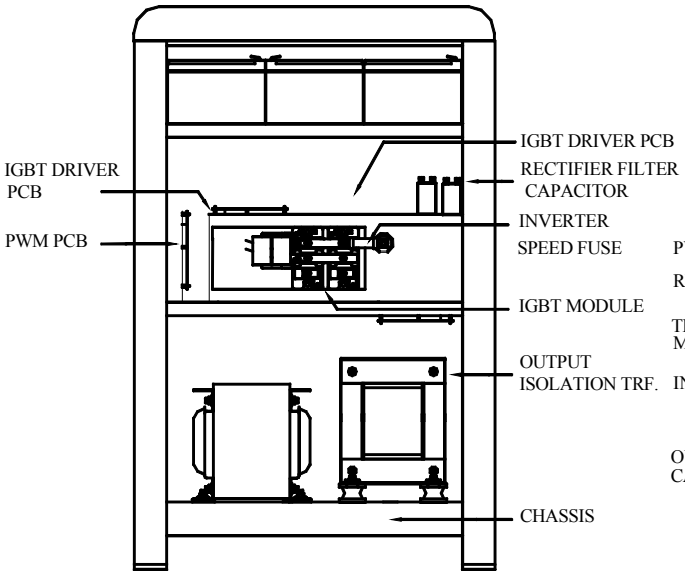

RIGHT VIEW

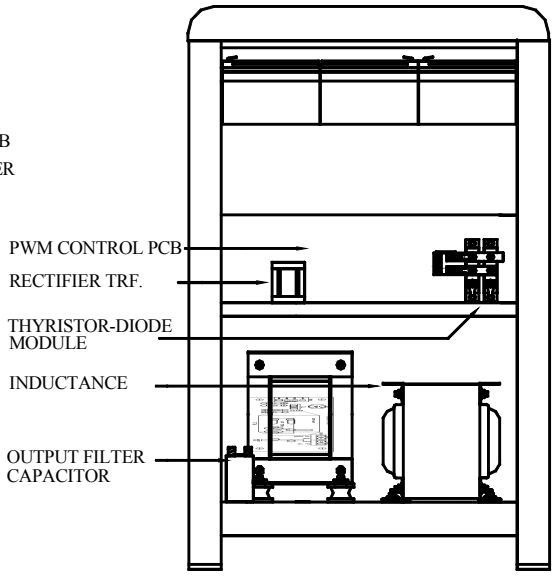

LEFT VIEW

INVERTER-5000/…../15000;(1 / 1 PHASE) MECHANICAL WIEV

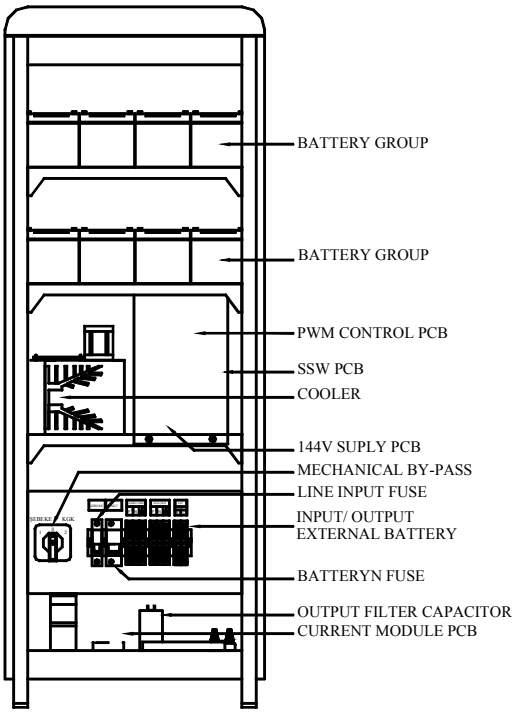

FRONT VIEW

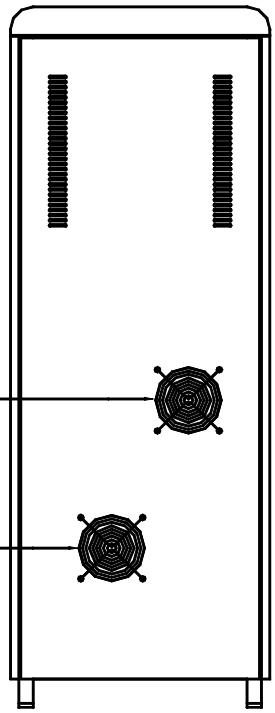

REAR VIEW

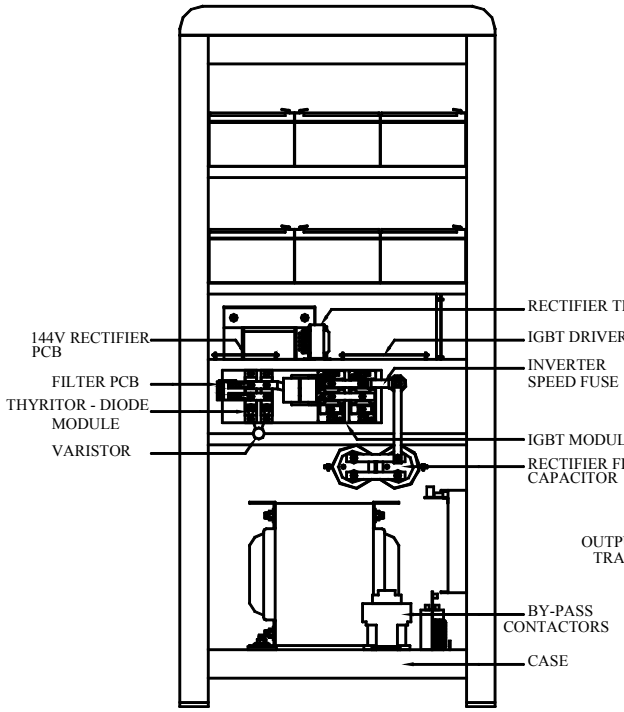

LEFT VIEW

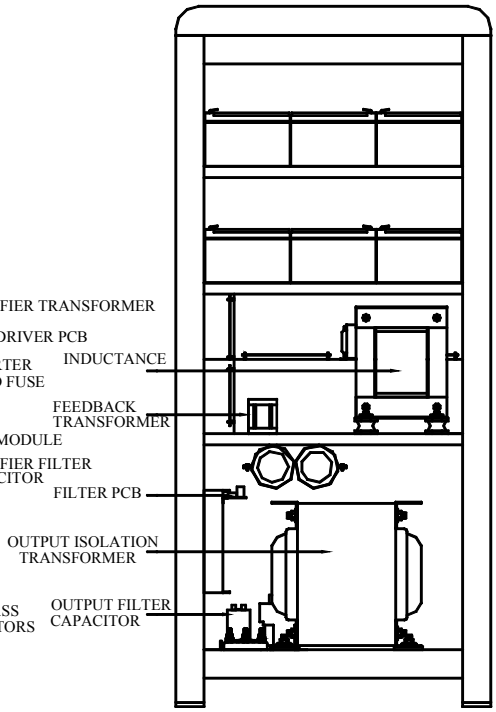

RIGHT VIEW

INVERTER-5..15kVA;(1/1 PHASE)INPUT/OUTPUT/BATTERY CONNECTION

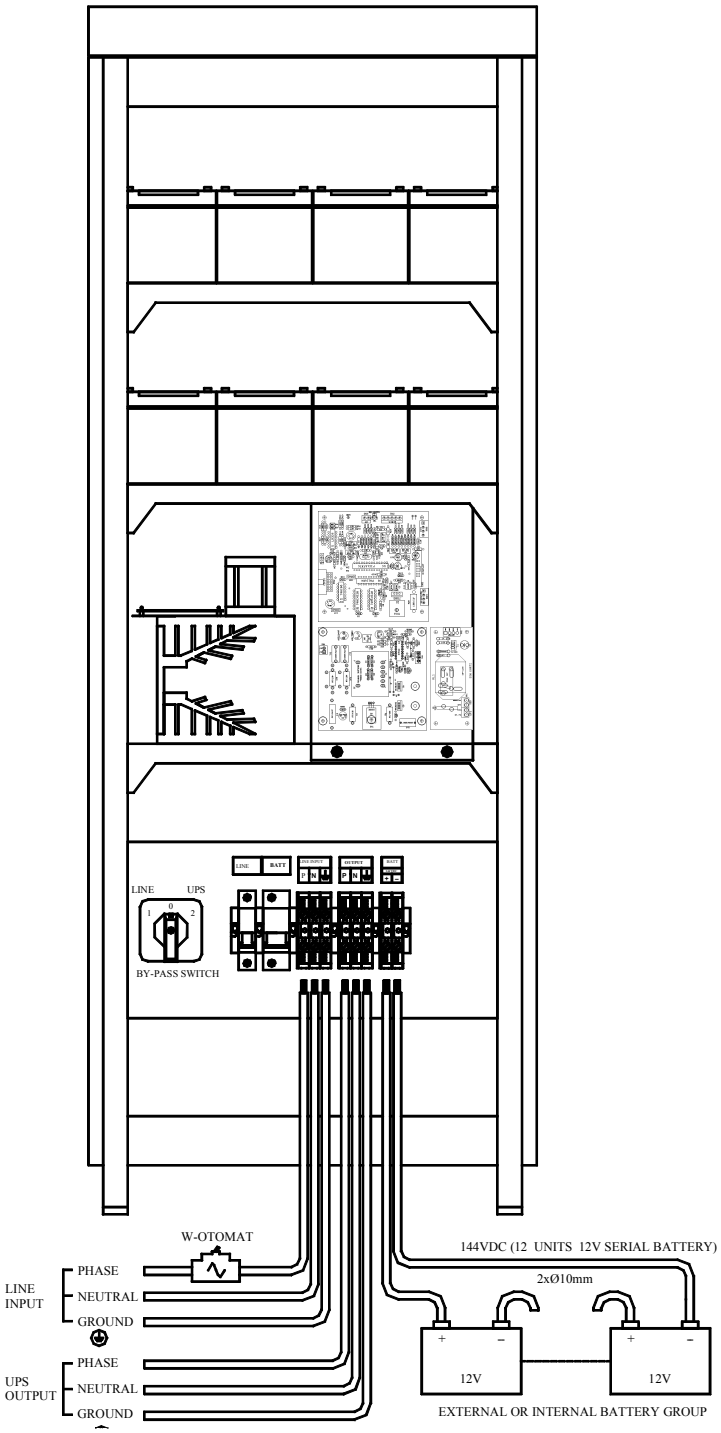

INVERTER-2000//5000;(1/1 PHASE)PHASE ELECTRICAL SHEMA

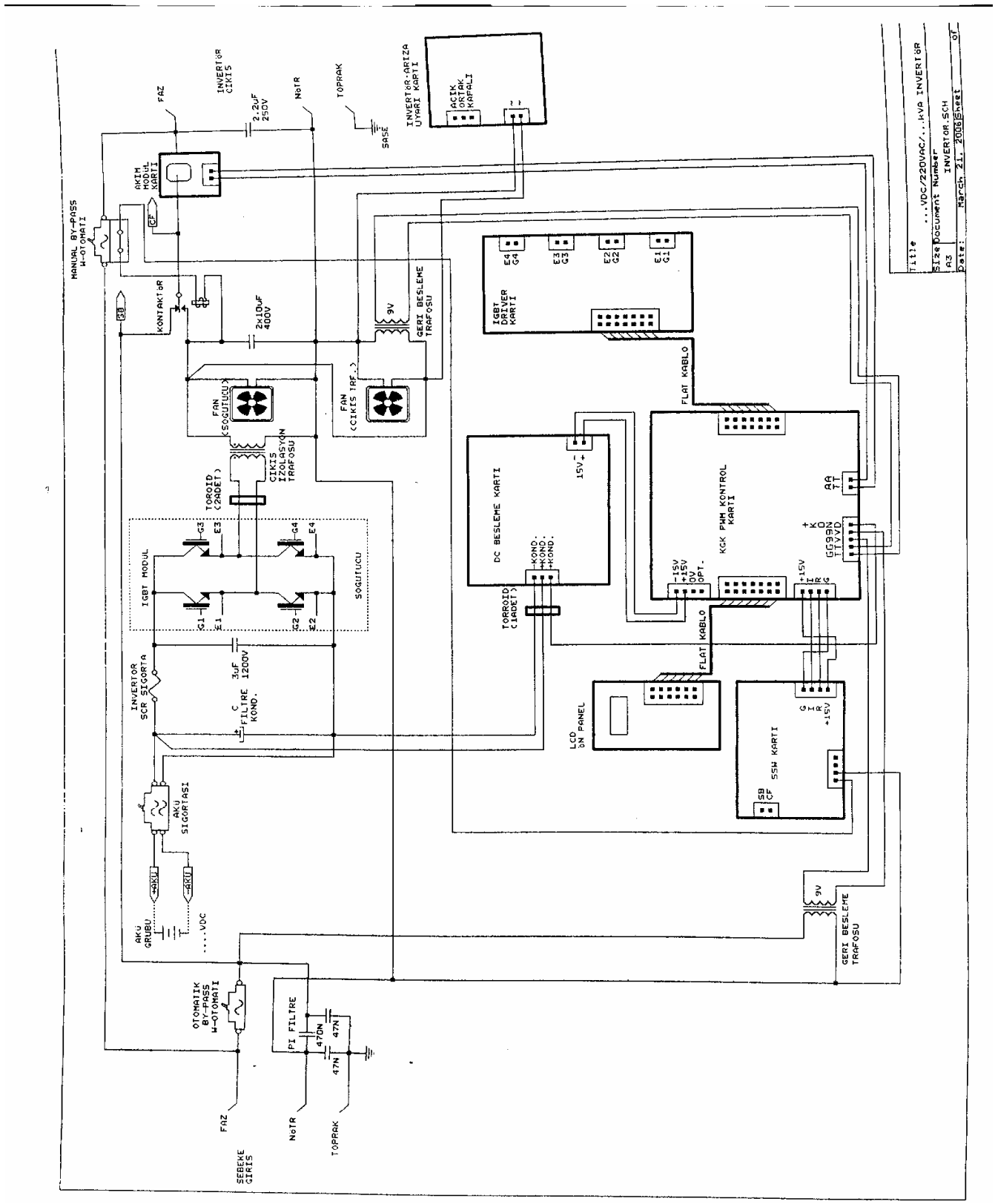

EXTERNAL BATTERY CONNECTION

*** 144 VDC (12 BATTERIES IN SERIES)**

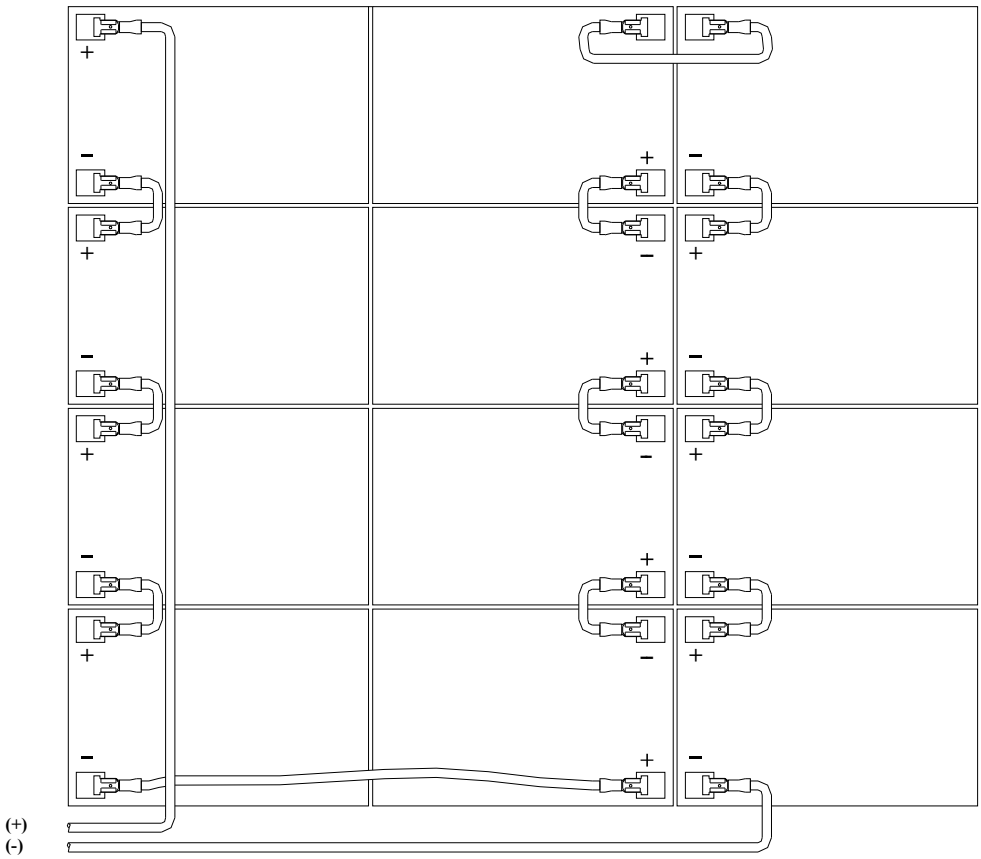

*** 264 VDC (22 BATTERIES IN SERIES)**

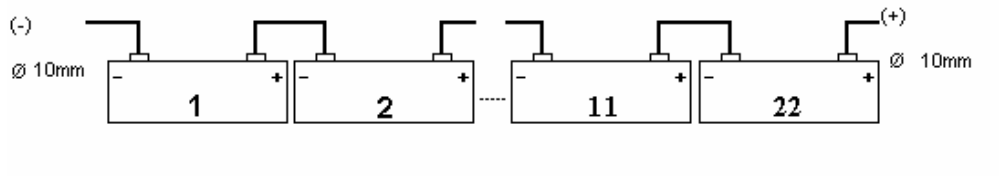

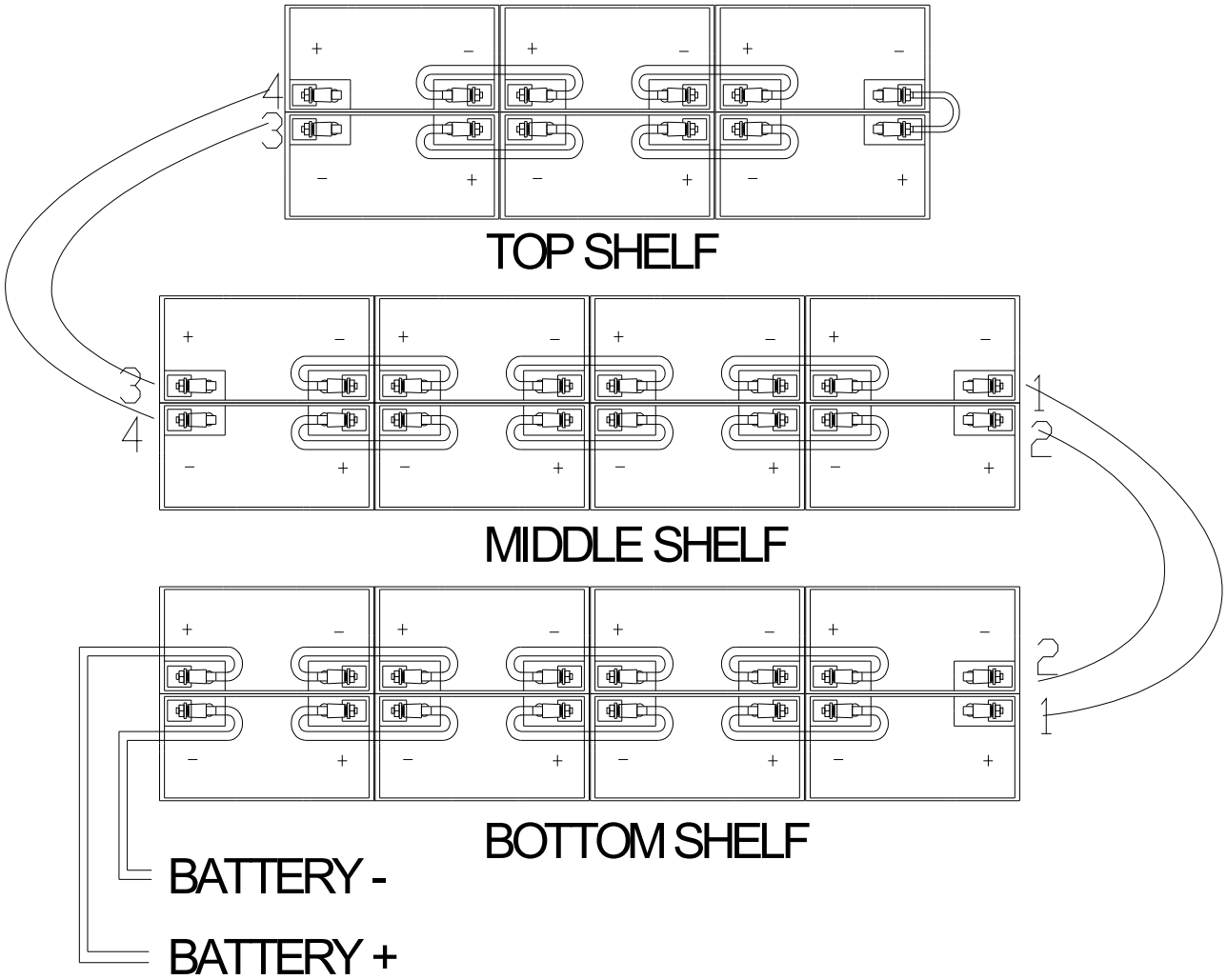

*** 360 VDC (30 BATTERIES IN SERIES)**

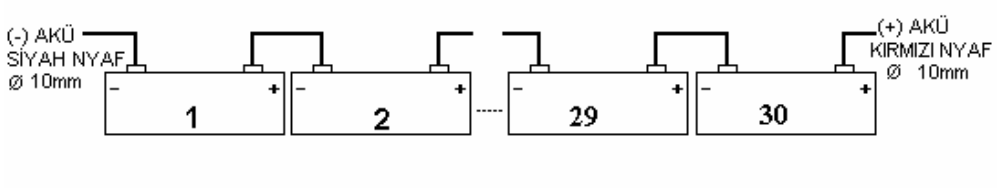

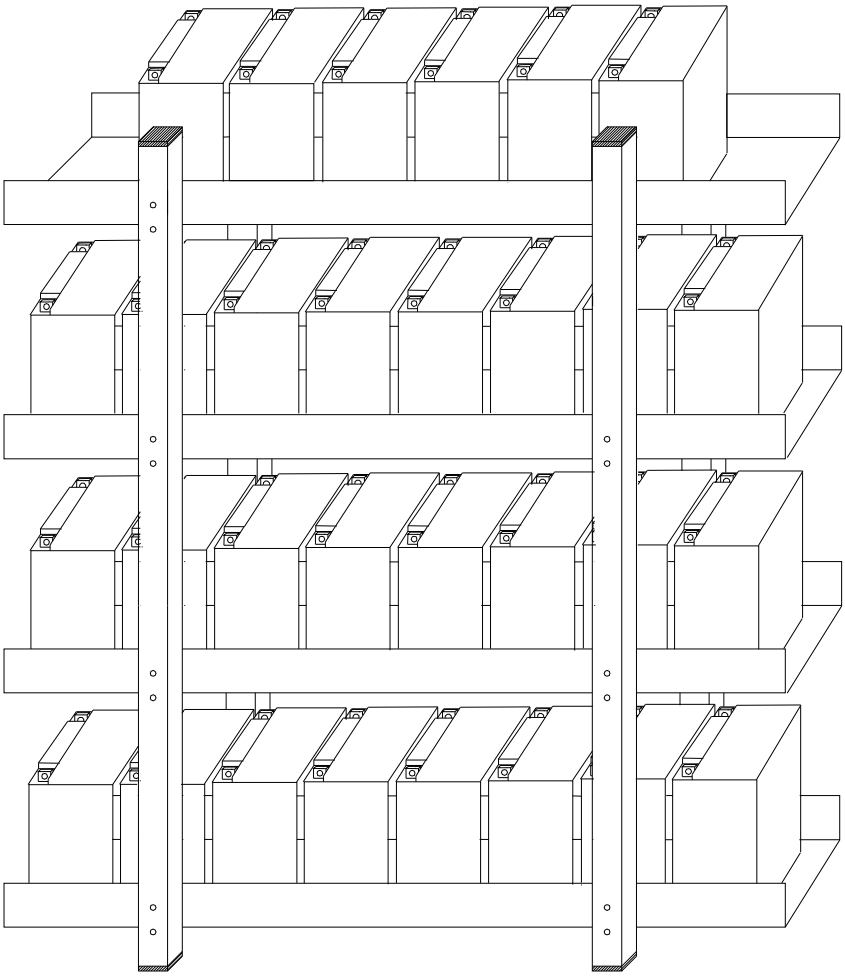

30 ADET AKÜ DİZİLİŞİ

FAILURE – CORRECTIONS INSTRUCTIONS

1- If the battery backup time becomes short in the case of line failure, change the battery group with the same type. During this procedure, please close all switches OFF position and disconnect the line input.

2- If there is an inverter failure, please check inverter SCR fuse and if it is OFF, then change with the same type and make on the UPS. Still the failure continues, please call technical service to have information about spare parts and repair instructions. (IGBT Modules, Driver PCB, Control PCB, Supply PCB)

3- If there is a rectifier failure, please check input line fuse, if it is OFF, then make it on again. Still the failure continues, please check line protection varistor. If it is defective, disconnect the varistor and change it in the shortest time. Other wise please call technical service to have information about rectifier modules and rectifier control PCB for repair.

4- If there is an over load and UPS works on by-pass line, please check output load. To find out over load mistake, please check all outlets for the load used and disconnect the wrong load (heather, refrigerator, photo copy machine, cleaner machine,…). To present mistake UPS outlet used, please cancel all unused outlets.

MAINTENANCE

CAUTION Maintenance inside the UPS should only be done by qualified personnel. Inside the equipment there are voltages even with the input and battery switches open. Removal of the side panels of the UPS by unqualified personnel can cause harm to the operator and damage the equipment.

Preventive Maintenance

The only components of the UPS which require periodic checking are the blowers and batteries.

- **Blowers** should be checked for correct operation periodically.
- **Batteries.** CAUTION Any battery replacement should be done by qualified personnel. For disposal of the replaced parts it is obligatory to deliver them to one of the special consortiums for disposal by recycling. Batteries are classified "toxic waste" by law. The system automatically checks battery efficiency every 24 hours and gives an alarm when it finds efficiency very much lower than that calculated on the basis of memorized capacity (see key menu 3.2 BATTERY TEST). Battery life depends on operating temperature and the number of charging cycles performed. Battery life when used at 20ºC is approximately 3 to 5 years while duration is halved if operating temperature goes to 30ºC. Capacity is not constant but increases after a few charging and discharging cycles, then remains constant for several hundred cycles and finally decreases.

Battery maintenance should include:

- Holding operating temperature in the range 20-25ºC.
- During the first month of use carry out two or three charge / discharge cycles.
- After the first month of use perform this operation every six month.

The battery should be charged if necessary only by qualified personnel. To eliminate replaced parts it is obligatory to deliver them to one of the special consortium for disposal by recycling. The batteries are classified toxic waste by law.

INDEX